PHOS WINDOW

SERIES 1600 SINGLE HUNG TWIN WINDOW (WZ3) (IMPACT)

GENERAL NOTES:

1. THE PRODUCT SHOWN HEREIN IS DESIGNED AND MANUFACTURED TO COMPLY WITH THE CURRENT EDITION FLORIDA BUILDING CODE (FBC) **EXCLUDING** HVHZ. ALL PRODUCTS UNDER THE SCOPE OF THIS DOCUMENT HAVE BEEN EVALUATED ACCORDING TO THE FOLLOWING:
   - AAMA/WDMA/CSA 101/I.S.2/A440-17
   - ASTM E1886-19
   - ASTM E1996-20

2. ADEQUACY OF THE EXISTING STRUCTURAL CONCRETE/MASONRY, 2X AND METAL STUD FRAMING AS A MAIN WIND FORCE RESISTING SYSTEM CAPABLE OF WITHSTANDING AND TRANSFERRING APPLIED PRODUCT LOADS TO THE FOUNDATION IS THE RESPONSIBILITY OF THE ENGINEER OR ARCHITECT OF RECORD FOR THE PROJECT OF INSTALLATION.

3. 1X AND 2X BUCKS (WHEN USED) SHALL BE DESIGNED AND ANCHORED TO PROPERLY TRANSFER ALL LOADS TO THE STRUCTURE. BUCK DESIGN AND INSTALLATION IS THE RESPONSIBILITY OF THE ENGINEER OR ARCHITECT OF RECORD FOR THE PROJECT OF INSTALLATION.

4. INSTALL INDIVIDUAL INSTALLATION ANCHORS WITHIN A TOLERANCE OF ±1/4 INCH OF THE DEPICTED LOCATION IN THE ANCHOR LAYOUT DETAIL (I.E., WITHOUT CONSIDERATION OF TOLERANCES). TOLERANCES ARE NOT CUMULATIVE FROM ONE INSTALLATION ANCHOR TO THE NEXT.

5. THE INSTALLATION DETAILS DESCRIBED HEREIN ARE GENERIC AND MAY NOT REFLECT ACTUAL CONDITIONS FOR A SPECIFIC SITE. IF SITE CONDITIONS CAUSE INSTALLATION TO DEVIATE FROM THE REQUIREMENTS DETAILED HEREIN, A LICENSED ENGINEER OR ARCHITECT SHALL PREPARE SITE SPECIFIC DOCUMENTS FOR USE WITH THIS DOCUMENT.

6. APPROVED IMPACT PROTECTIVE SYSTEM **IS NOT REQUIRED** TO PROTECT THIS PRODUCT IN AREAS REQUIRING IMPACT RESISTANCE IN WIND ZONE 3 OR LESS.

7. APPROVED IMPACT PROTECTIVE SYSTEM **IS REQUIRED** TO PROTECT THIS PRODUCT IN AREAS REQUIRING IMPACT RESISTANCE IN WIND ZONE 4.

8. FRAME MATERIAL: uPVC.

9. GLASS MEETS THE REQUIREMENTS OF ASTM E1300 GLASS CHARTS. SEE SHEET 1 FOR GLAZING DETAILS.

TABLE OF CONTENTS

SHEET	SHEET DESCRIPTION
1	GENERAL NOTES AND GLAZING DETAILS
2	TYPICAL ELEVATION AND ANCHOR LAYOUTS
3	VERTICAL SECTIONS
4	HORIZONTAL SECTIONS
5	INSTALLATION NOTES AND DETAILS

DESIGN PRESSURE RATING

FRAME SIZE	DESIGN PRESSURE	MISSILE RATING
72-1/2" X 73"	+/- 50 PSF	LARGE & SMALL MISSILE IMPACT

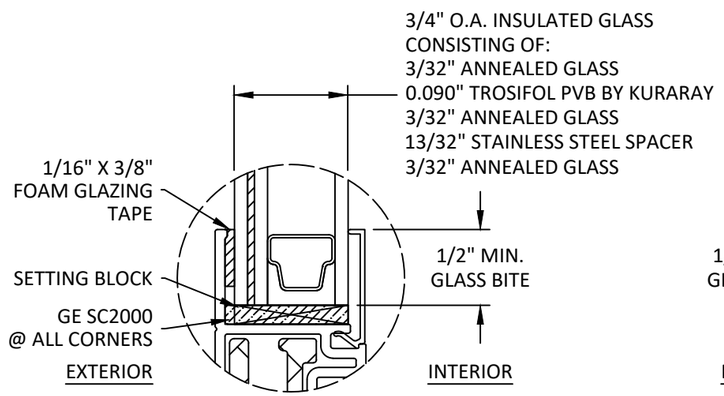

GLAZING DETAIL 1

FIXED

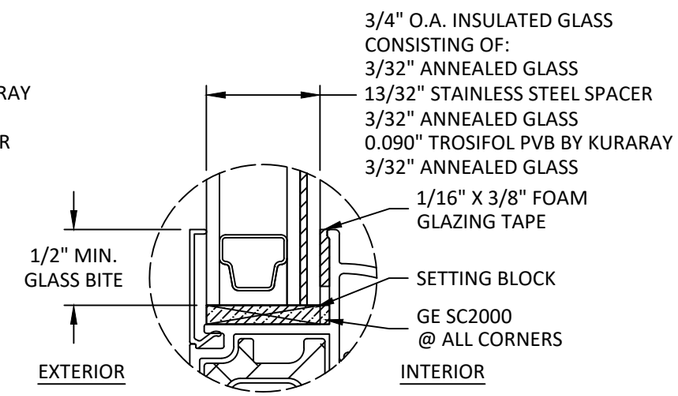

GLAZING DETAIL 2

SASH

GLAZING NOTES:

1. GLASS TYPE & THICKNESS COMPLIES WITH ASTM E1300 REQUIREMENTS. TEMPER AND SAFETY GLAZING REQUIREMENTS SHALL BE REVIEWED ON A SITE SPECIFIC BASIS.
2. SETTING BLOCK DUROMETER HARDNESS OF 70-90 (SHORE A) AS REFERENCED IN FBC CHAPTER 24.
3. SETTING BLOCKS TO BE LOCATED AT 1/4 SPAN LENGTH FOR GLASS WIDER THAN 36" AS PER FBC CHAPTER 24.
4. D.L.O. AND DESIGN PRESSURES MAY NOT EXCEED MAX. VALUES IN SHEETS 1 & 2.
5. A CHANGE IN SPACER TYPE, SHAPE, OR DIMENSION IS ALLOWED AUTOMATICALLY.

PHOS WINDOW
1201 ECHOLS DR
FORT PAYNE, AL 35968
PH: (256) 417-4919 FX: (866) 929-1976

TITLE: SERIES 1600 SINGLE HUNG TWIN WINDOW (WZ3) (IMPACT)

GENERAL NOTES & GLAZING DETAILS

PREPARED BY: BUILDING DROPS, INC.
1900 NE MIAMI CT., STE. 2-15
MIAMI, FL 33132
PH: (954)399-8478
FAX: (954)744.4738
WEB: www.buildingdrops.com

REMARKS	BY	DATE
NAME CHANGE	HJ	10.2025

THE INSTALLATION DETAILS DESCRIBED HEREIN ARE GENERIC AND MAY NOT REFLECT ACTUAL CONDITIONS FOR A SPECIFIC SITE. IF SITE CONDITIONS CAUSE INSTALLATION TO DEVIATE FROM THE REQUIREMENTS DETAILED HEREIN, A LICENSED ENGINEER OR ARCHITECT SHALL PREPARE SITE SPECIFIC DOCUMENTS FOR USE WITH THIS DOCUMENT.

Digitally signed by Hermes F. Norero, P.E.
Reason: I am approving this document
Date: 2025.11.09 11:52:07 -07'00'

HERMES F. NORERO
LICENSE
No. 73778
STATE OF FLORIDA
PROFESSIONAL ENGINEER

HERMES F. NORERO P.E.
FLORIDA P.E. No 73778
BUILDING DROPS, INC
1900 NE MIAMI CT., STE. 2-15
MIAMI, FL 33132
FBPE CERT. OF AUTHORIZATION No. 29578

FL #: FL46607

DATE: 10.17.2025

DWG. BY: HJ

CHK. BY: HFN

SCALE: NTS

DWG. #: PHS005

SHEET: 1 OF 5

10/23/2025 3:46 PM
c:\users\harleyjeanty\building drops, inc\building drops landing - common\projects\all temp windows\fbc-25-0929.1 - submittal - fpa revisions - name change\dwgs\f46607 sh\phs005.dwg

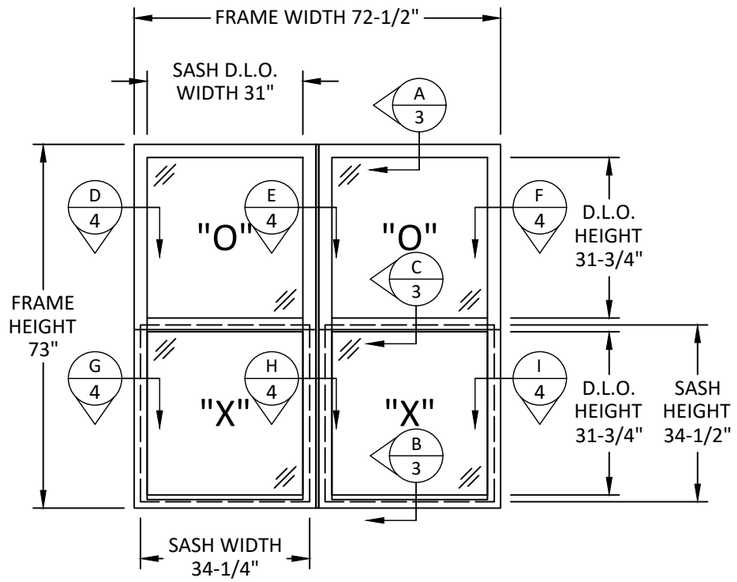

TYPICAL ELEVATION

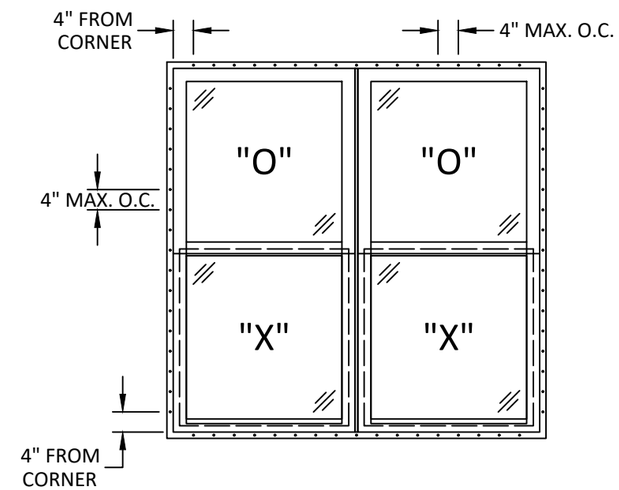

ANCHOR LAYOUT

NAIL FIN

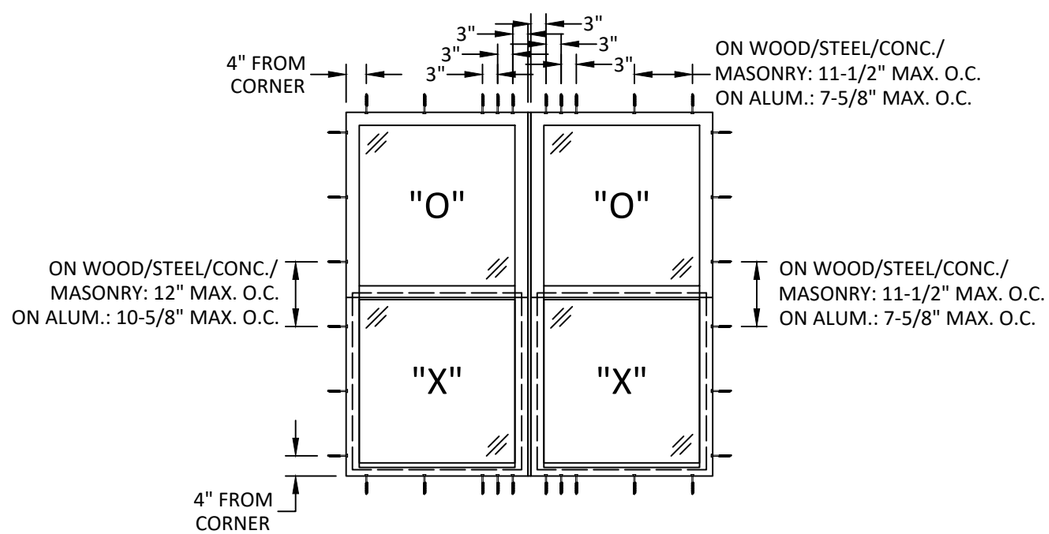

ANCHOR LAYOUT

THROUGH FRAME

PHOS WINDOW
1201 ECHOLS DR
FORT PAYNE, AL 35968
PH: (256) 417-4919 FX: (866) 929-1976

TITLE:
SERIES 1600 SINGLE HUNG TWIN WINDOW (WZ3) (IMPACT)
TYPICAL ELEVATION & ANCHOR LAYOUTS

PREPARED BY:
BUILDING DROPS, INC.
1900 NE MIAMI CT., STE. 2-15
MIAMI, FL 33132
PH: (954)399-8478
FAX: (954)744.4738
WEB: www.buildingdrops.com

REMARKS	BY	DATE
NAME CHANGE	HJ	10.2025

THE INSTALLATION DETAILS DESCRIBED HEREIN ARE GENERIC AND MAY NOT REFLECT ACTUAL CONDITIONS FOR A SPECIFIC SITE. IF SITE CONDITIONS CAUSE INSTALLATION TO DEVIATE FROM THE REQUIREMENTS DETAILED HEREIN, A LICENSED ENGINEER OR ARCHITECT SHALL PREPARE SITE SPECIFIC DOCUMENTS FOR USE WITH THIS DOCUMENT.

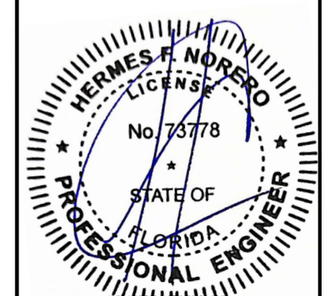

HERMES F. NORERO P.E.
FLORIDA P.E. No 73778
BUILDING DROPS, INC
1900 NE MIAMI CT., STE. 2-15
MIAMI, FL 33132
FBPE CERT. OF AUTHORIZATION No. 29578

FL #: FL46607

DATE: 10.17.2025

DWG. BY: HJ

CHK. BY: HFN

SCALE: NTS

DWG. #: PHS005

SHEET: 2 OF 5

10/23/2025 3:46 PM
c:\users\hartleyjeanty\building drops, inc\building drops landing - common\projects\all temp windows\fbc-25-09291 - submittal - fpa revisions - name change\dwgs\fl46607 sh\phs005.dwg

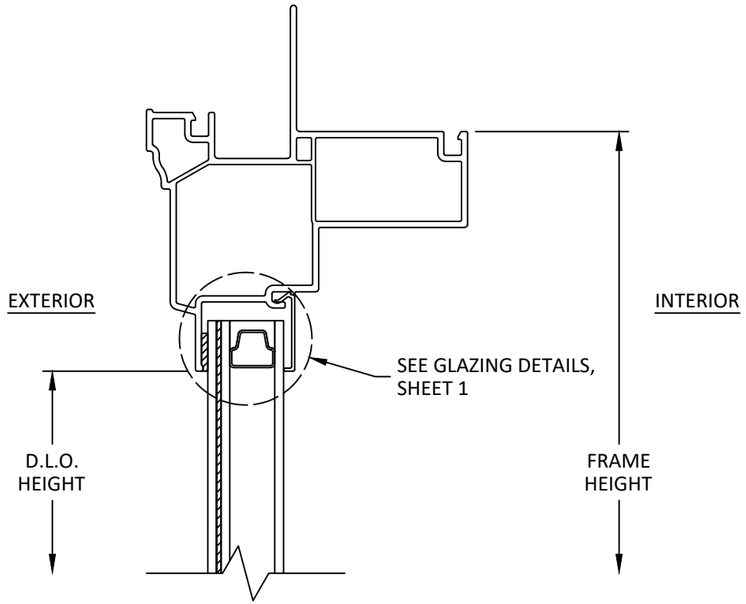

A/3 VERTICAL SECTION
HEAD

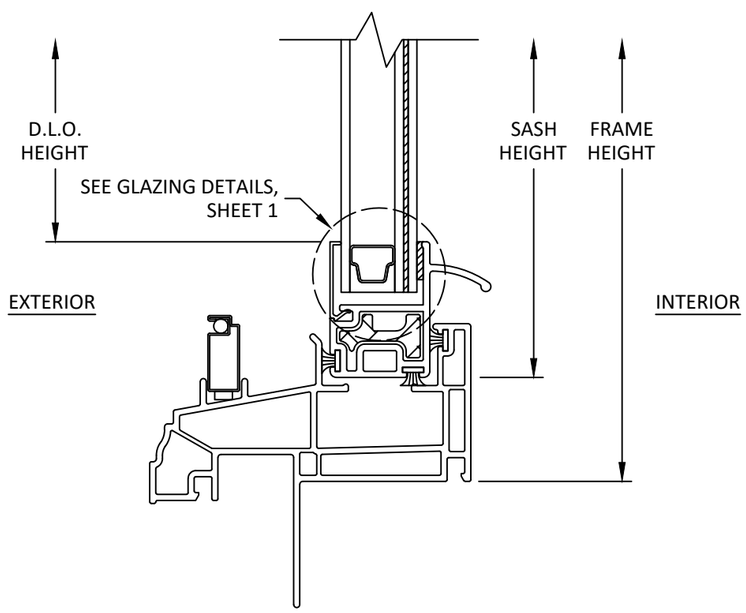

B/3 VERTICAL SECTION
SILL

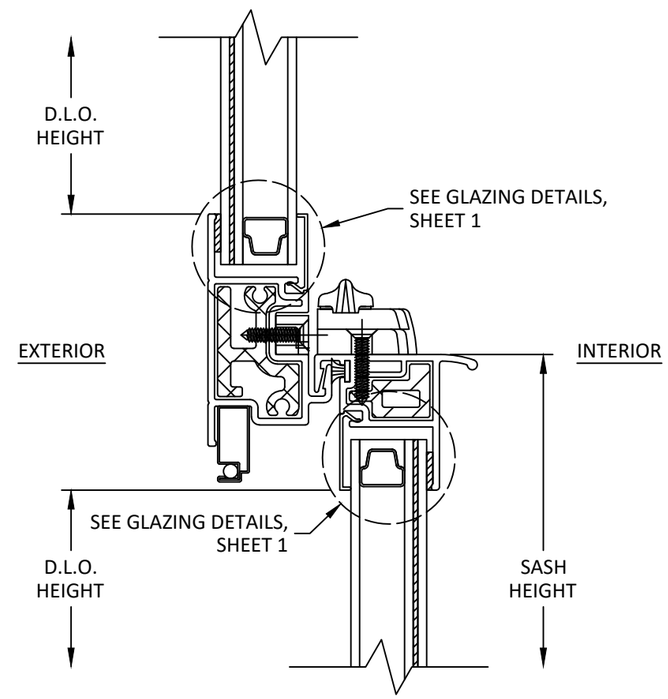

C/3 VERTICAL SECTION
MEETING RAIL

PHOS WINDOW
1201 ECHOLS DR
FORT PAYNE, AL 35968
PH: (256) 417-4919 FX: (866) 929-1976

TITLE: SERIES 1600 SINGLE HUNG TWIN WINDOW (WZ3) (IMPACT)
VERTICAL SECTIONS

PREPARED BY: BUILDING DROPS, INC.
1900 NE MIAMI CT., STE 2-15
MIAMI, FL 33132
PH: (954)399-8478
FAX: (954)744.4738
WEB: www.buildingdrops.com

REMARKS	BY	DATE
NAME CHANGE	HJ	10.2025

THE INSTALLATION DETAILS DESCRIBED HEREIN ARE GENERIC AND MAY NOT REFLECT ACTUAL CONDITIONS FOR A SPECIFIC SITE. IF SITE CONDITIONS CAUSE INSTALLATION TO DEVIATE FROM THE REQUIREMENTS DETAILED HEREIN, A LICENSED ENGINEER OR ARCHITECT SHALL PREPARE SITE SPECIFIC DOCUMENTS FOR USE WITH THIS DOCUMENT.

HERMES F. NORERO
LICENSE
No. 73778
STATE OF
FLORIDA
PROFESSIONAL ENGINEER

HERMES F. NORERO P.E.
FLORIDA P.E. No 73778
BUILDING DROPS, INC
1900 NE MIAMI CT., STE. 2-15
MIAMI, FL 33132
FBPE CERT. OF AUTHORIZATION No. 29578

FL #: FL46607
DATE: 10.17.2025
DWG. BY: HJ
CHK. BY: HFN
SCALE: NTS
DWG. #: PHS005
SHEET: 3 OF 5

10/23/2025 3:46 PM
c:\users\harleyjeanty\building drops, inc\building drops landing - common\projects\all temp windows\fbc-25-0929.1 - submittal - fpar revisions - name change\dwgs\fl46607 sh\phs005.dwg

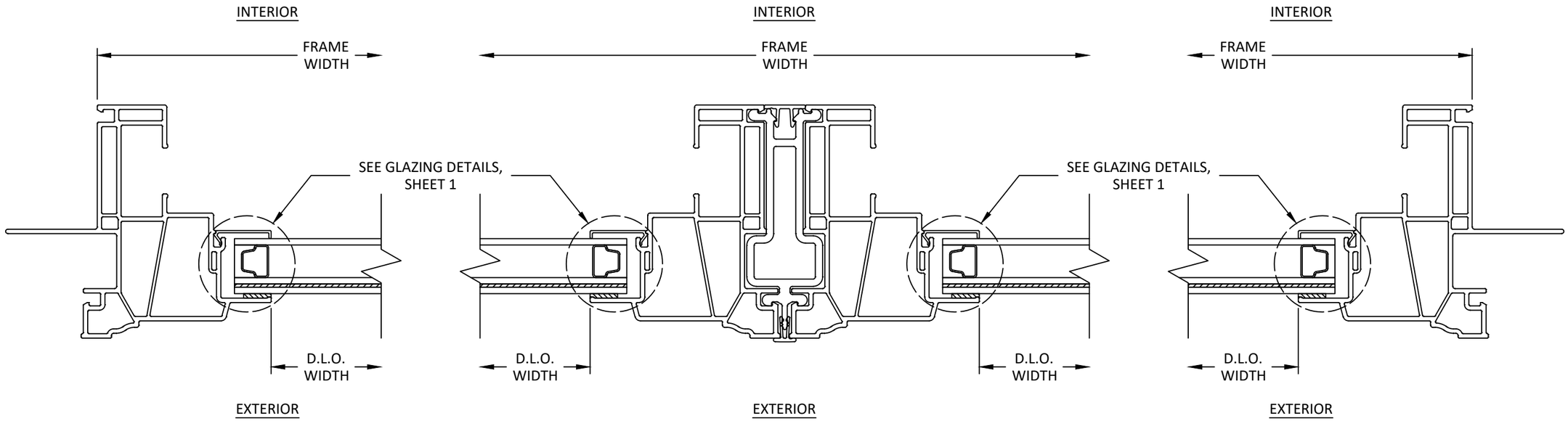

D/4 HORIZONTAL SECTION
FIXED JAMB

E/4 HORIZONTAL SECTION
MULLION - FIXED

F/4 HORIZONTAL SECTION
FIXED JAMB

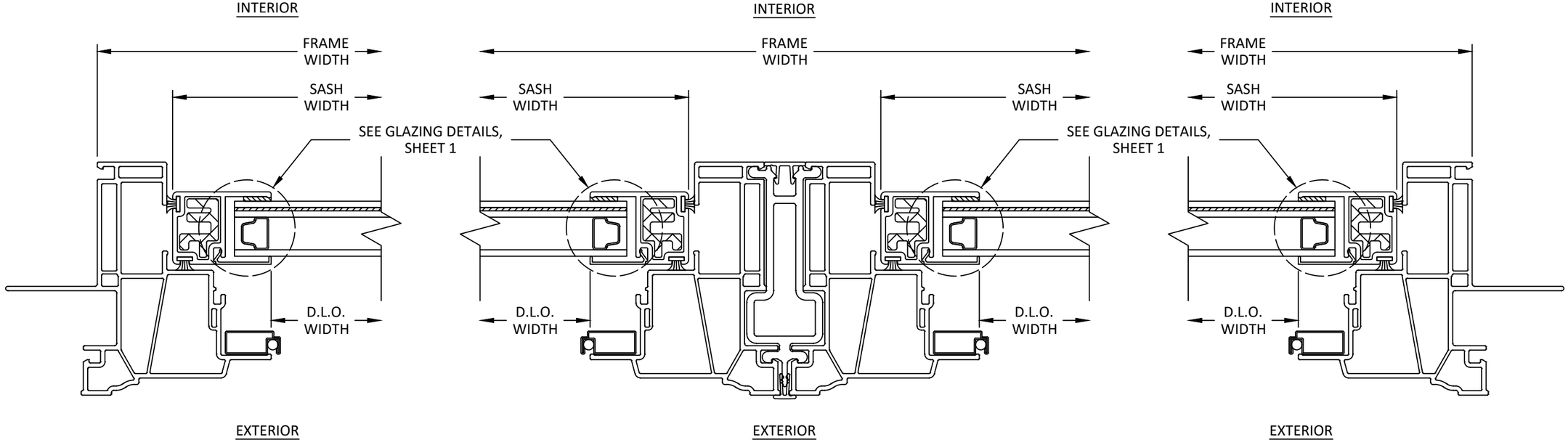

G/4 HORIZONTAL SECTION
SASH JAMB

H/4 HORIZONTAL SECTION
MULLION - SASH

I/4 HORIZONTAL SECTION
SASH JAMB

PHOS WINDOW
1201 ECHOLS DR
FORT PAYNE, AL 35968
PH: (256) 417-4919 FX: (866) 929-1976

TITLE: SERIES 1600 SINGLE HUNG TWIN WINDOW (WZ3) (IMPACT)
HORIZONTAL SECTIONS

PREPARED BY: BUILDING DROPS, INC.
1900 NE MIAMI CT., STE. 2-15
MIAMI, FL 33132
PH: (954)399-8478
FAX: (954)744.4738
WEB: www.buildingdrops.com

REMARKS	BY	DATE
NAME CHANGE	HJ	10.2025

THE INSTALLATION DETAILS DESCRIBED HEREIN ARE GENERIC AND MAY NOT REFLECT ACTUAL CONDITIONS FOR A SPECIFIC SITE. IF SITE CONDITIONS CAUSE INSTALLATION TO DEVIATE FROM THE REQUIREMENTS DETAILED HEREIN, A LICENSED ENGINEER OR ARCHITECT SHALL PREPARE SITE SPECIFIC DOCUMENTS FOR USE WITH THIS DOCUMENT.

HERMES F. NORERO
LICENSE
No. 73778
STATE OF FLORIDA
PROFESSIONAL ENGINEER

HERMES F. NORERO P.E.
FLORIDA P.E. No 73778
BUILDING DROPS, INC
1900 NE MIAMI CT., STE. 2-15
MIAMI, FL 33132
FBPE CERT. OF AUTHORIZATION No. 29578

FL #: FL46607
DATE: 10.17.2025
DWG. BY: HJ
CHK. BY: HFN
SCALE: NTS
DWG. #: PHS005
SHEET: 4 OF 5

10/23/2025 3:46 PM
c:\users\harleyjeanty\building drops, inc\building drops landing - common\projects\all temp windows\fbc-25-09291 - submittal - fpa revisions - name change\dwgs\fl46607 sh\phs005.dwg

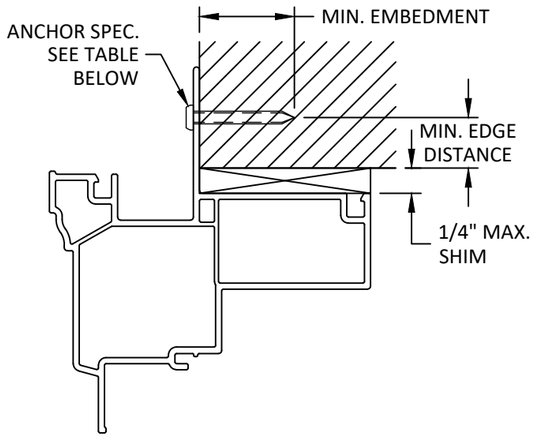

J/5 INSTALLATION DETAIL

NAIL FIN
HEAD

JAMB & SILL SIMILAR

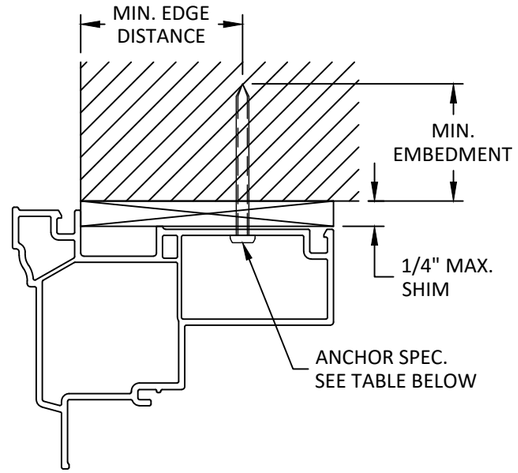

K/5 INSTALLATION DETAIL

THROUGH FRAME
HEAD

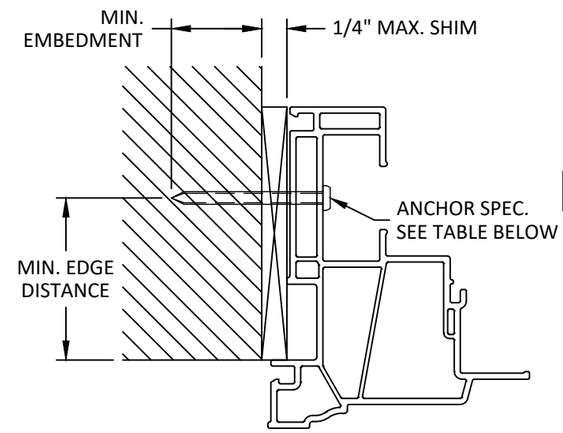

L/5 INSTALLATION DETAIL

THROUGH FRAME
JAMB

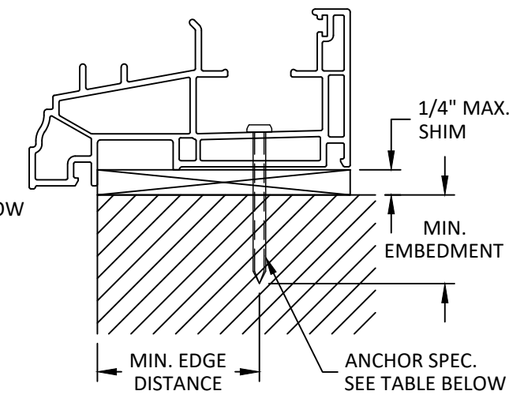

M/5 INSTALLATION DETAIL

THROUGH FRAME
SILL

INSTALLATION NOTES:

1. ONE (1) INSTALLATION ANCHOR IS REQUIRED AT EACH ANCHOR LOCATION.
2. THE NUMBER OF INSTALLATION ANCHORS DEPICTED IS THE MINIMUM NUMBER OF ANCHORS TO BE USED FOR PRODUCT INSTALLATION OF THE MAXIMUM SIZE LISTED.
3. INSTALL INDIVIDUAL INSTALLATION ANCHORS WITHIN A TOLERANCE OF ±1/4 INCH OF THE DEPICTED LOCATION & SPACING IN THE ANCHOR LAYOUT DETAILS (I.E., WITHOUT CONSIDERATION OF TOLERANCES). TOLERANCES ARE NOT CUMULATIVE FROM ONE INSTALLATION ANCHOR TO THE NEXT.
4. FOR NAIL FIN INSTALLATION, SHIM AS NEEDED TO ACHIEVE A PLUMB AND SQUARE INSTALLATION. MAXIMUM ALLOWABLE SHIM STACK TO BE 1/4 INCH. SHIM(S) SHALL BE CONSTRUCTED OF HIGH DENSITY PLASTIC OR BETTER.
5. FOR THROUGH FRAME INSTALLATION, SHIM AS REQUIRED AT EACH INSTALLATION ANCHOR WITH LOAD BEARING SHIM(S). MAXIMUM ALLOWABLE SHIM STACK TO BE 1/4 INCH. SHIM WHERE SPACE OF 1/16 INCH OR GREATER OCCURS. SHIM(S) SHALL BE CONSTRUCTED OF HIGH DENSITY PLASTIC OR BETTER.
6. FOR MASONRY OR CONCRETE OPENINGS, A 1X WOOD BUCK MAY BE USED (OPTIONAL) AS LONG AS THE MINIMUM EMBEDMENT AND EDGE DISTANCE REQUIREMENTS ARE STILL MET WITHIN THE CORRESPONDING HOST SUBSTRATE. SEE GENERAL NOTE #3 ON SHEET 1 FOR MORE INFORMATION.
7. MINIMUM EMBEDMENT AND EDGE DISTANCE EXCLUDE WALL FINISHES, INCLUDING BUT NOT LIMITED TO STUCCO, FOAM, BRICK VENEER, AND SIDING.
8. INSTALLATION ANCHORS AND ASSOCIATED HARDWARE MUST BE MADE OF CORROSION RESISTANT MATERIAL OR HAVE A CORROSION RESISTANT COATING.
9. FOR HOLLOW BLOCK AND GROUT FILLED BLOCK, DO NOT INSTALL INSTALLATION ANCHORS INTO MORTAR JOINTS. EDGE DISTANCE IS MEASURED FROM FREE EDGE OF BLOCK OR EDGE OF MORTAR JOINT INTO FACE SHELL OF BLOCK.
10. INSTALLATION ANCHORS SHALL BE INSTALLED IN ACCORDANCE WITH ANCHOR MANUFACTURER'S INSTALLATION INSTRUCTIONS, AND ANCHORS SHALL NOT BE USED IN SUBSTRATES WITH STRENGTHS LESS THAN THE MINIMUM STRENGTH SPECIFIED BY THE ANCHOR MANUFACTURER.

ANCHOR SCHEDULE

METHOD	SUBSTRATE	ANCHOR TYPE	MIN. EMBEDMENT	MIN. EDGE DISTANCE
NAIL FIN	WOOD: MIN. S.G. = 0.55	#8 PAN HEAD WOOD SCREW	3/4"	1/2"
	STEEL: MIN. 16 GA. MIN. Fy = 36 ksi	#8 GRADE 5 PAN HEAD SELF-DRILLING/ SELF-TAPPING SCREW	3 THREADS MIN PENETRATION BEYOND METAL	1/2"
	ALUMINUM: MIN. 1/8" THICK MIN. 6063-T5			
THROUGH FRAME - HEAD	WOOD: MIN. S.G. = 0.55	#10 WOOD SCREW	1-1/2"	1"
THROUGH FRAME - JAMB & SILL	WOOD: MIN. S.G. = 0.55	#8 WOOD SCREW	1-1/2"	3/4"
THROUGH FRAME - HEAD, JAMB, & SILL	STEEL: MIN. 16 GA. MIN. Fy = 36 ksi	#8 GRADE 5 SELF-DRILLING/ SELF-TAPPING SCREW	3 THREADS MIN PENETRATION BEYOND METAL	1/2"
	ALUMINUM: MIN. 1/8" THICK MIN. 6063-T5			
	CONCRETE: MIN. f'c = 3000 psi	3/16" ITW TAPCON	1"	1-1/2"
	MASONRY: CMU per ASTM C90 MIN. 2000 PSI		1"	2"

PHOS WINDOW
1201 ECHOLS DR
FORT PAYNE, AL 35968
PH: (256) 417-4919 FX: (866) 929-1976

TITLE: SERIES 1600 SINGLE HUNG TWIN WINDOW (WZ3) (IMPACT)
INSTALLATION NOTES AND DETAILS

PREPARED BY: BUILDING DROPS, INC.
1900 NE MIAMI CT., STE. 2-15
MIAMI, FL 33132
PH: (954)399-8478
FAX: (954)744.4738
WEB: www.buildingdrops.com

REMARKS	BY	DATE
NAME CHANGE	HJ	10.2025

THE INSTALLATION DETAILS DESCRIBED HEREIN ARE GENERIC AND MAY NOT REFLECT ACTUAL CONDITIONS FOR A SPECIFIC SITE. IF SITE CONDITIONS CAUSE INSTALLATION TO DEVIATE FROM THE REQUIREMENTS DETAILED HEREIN, A LICENSED ENGINEER OR ARCHITECT SHALL PREPARE SITE SPECIFIC DOCUMENTS FOR USE WITH THIS DOCUMENT.

HERMES F. NORERO
LICENSE
No. 73778
STATE OF
FLORIDA
PROFESSIONAL ENGINEER

HERMES F. NORERO P.E.
FLORIDA P.E. No 73778
BUILDING DROPS, INC
1900 NE MIAMI CT., STE. 2-15
MIAMI, FL 33132
FBPE CERT. OF AUTHORIZATION No. 29578

FL #: FL46607

DATE: 10.17.2025

DWG. BY: HJ | CHK. BY: HFN

SCALE: NTS

DWG. #: PHS005

SHEET: 5 OF 5

10/23/2025 3:46 PM
c:\users\harleyleanty\building drops, inc\building drops landing - common\projects\all temp windows\fbc-25-0929.1 - submittal - fpa revisions - name change\dwgs\fl46607 sh\phs005.dwg